CODE	DESCRIPTION	POS.	GR.
281680B72	INFERIOR BASIS SECCOREALE/EL.	1	
K040003700A	TRANSLATING BOARD ASSEMBLY	3	
K210001800A	SOURCE CABLE 3X1	4	
281678A72	CONDENSE TANK SECCOREALE/EL.	5	
594511A	GR CONDENSATE CONTAINER SECCOR.	6	
281804A69	CONDENSATE CONTAINER SECCOMINI	7	
281145A69	BUOY SECCOMINI	8	
281689A72	BUOY SUPPORT SECCOMINI	9	
281800A72	BLOCKING PLAQUE FOR CONTAINER	10	
592928A	GR CONTROL PANEL SECCOREALE	11	
592927A72	GR FRAME WITH FILTER SECCOREALE/EL.	12	
276506A	THERMOSTAT ART.K50-P1118/005	13	
281806B122	COMPLETE HANDLE SECCOREALE/EL.	14	
281682A72	MOTOR DOOR CONVEYOR SECCOR.	15	
281716A72	SUPPORTO MOTORE JOHNSON	16	
K020002500A	KELI MOTOR UNIT	17	
K020002400B	AXIAL FAN UNIT	18	
275040A	COMPRESSOR HITACHI BSA357	19	
275930A	MICROSWITCH X3C302K2LB	20	
281803A144	AIR INDUCTION GRILL SECCOREALE	21	
281801A144	BONNET SECCOREALE	22	
281802A144	LIFEBELT SECCOREALE	23	
281811A122	COVER FOR CONTROL PANEL	24	
K160002800A	GENERAL WIRING SECCOREALE	25	
K160003000A	WIRING FOR HEAT PROTECTOR	26	
K210003400A	CAPACITOR 5UF CBB61	27	
G0386A	GR.BSA357 COMPRESSOR ACCESSORIES	28	
G0385A	GR.SECCOREALE HITACHI HEAT EXCHARGE	29	

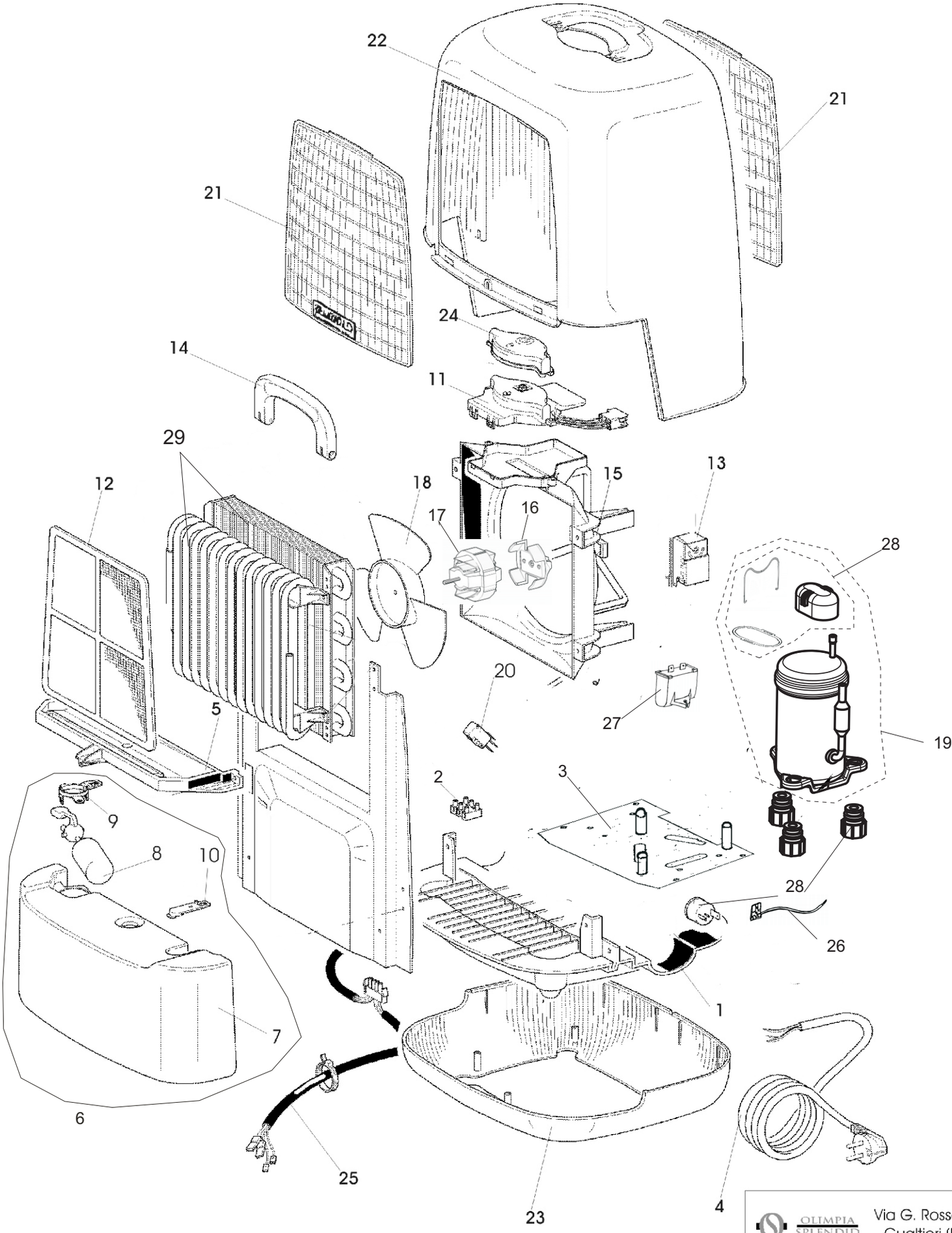

OLIMPIA SPLENDID
Via G. Rossa 1-3
Gualtieri (R.E.)

SECCOREALE

Agg.Marzo 2009 - RIF.105.00